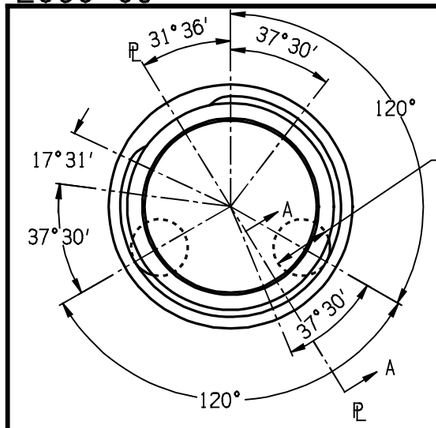

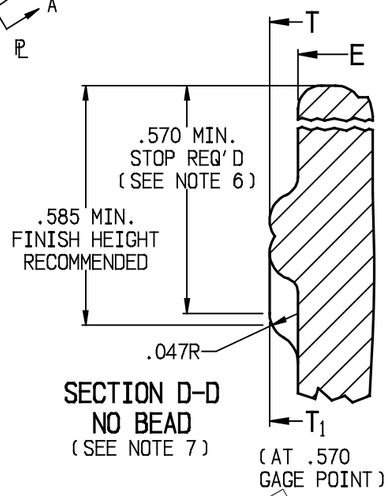

SECTION D-D
NO BEAD
(SEE NOTE 7)

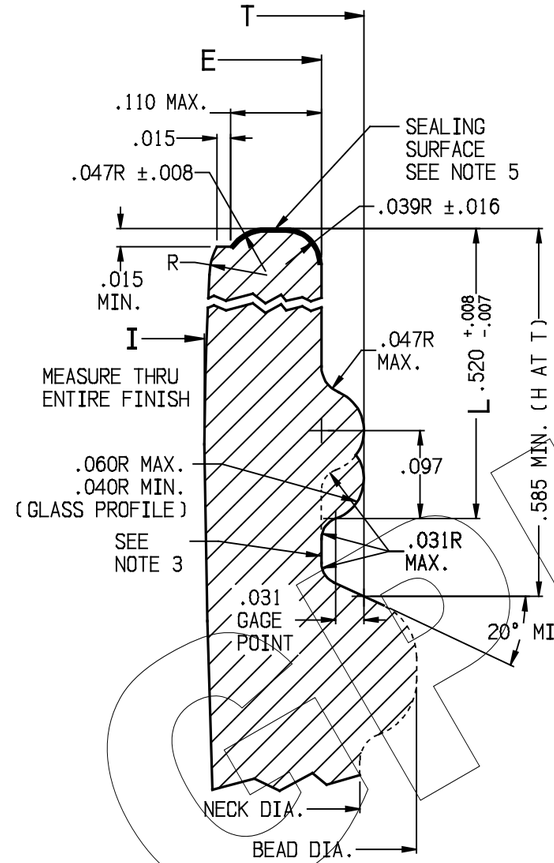

SECTION A-A
OPTIONAL BEAD

SIZE	E		T		T_1		I MIN.	β	T.P.I.	MIN. CHORD	
	IDEAL	TOL.	IDEAL	TOL.	IDEAL	TOL.				d	d_1
27	0.915	+.012 -.013	1.009	+.012 -.013	1.009	+.012 -.007	0.594	18°18′	1	0.186	0.143
30	1.035	+.012 -.013	1.129	+.012 -.013	1.129	+.012 -.007	0.750	16°24′	1	0.214	0.165
33	1.127	+.012 -.013	1.221	+.012 -.013	1.221	+.012 -.007	0.797	15°10′	1	0.235	0.182
38	1.368	±.015	1.462	±.015	1.462	+.015 -.008	0.938	12°41′	1	0.290	0.226

1. TANGENT $\beta = \dfrac{\text{LEAD}}{\pi\ (\text{MEAN BETWEEN MEAN 'T' AND MEAN 'E'})}$
2. LOCATING DOT REMAINS VISIBLE AFTER CAP APPLICATION, SHOWING POSITION OF STOP. DOT SHOULD NOT VIOLATE THE .585 MINIMUM DEPTH OR BEAD DIAMETER AND SHOULD BE A MINIMUM OF .063 INCH DIAMETER.
3. "E" DIAMETER MUST BE MAINTAINED DOWN TO FILLET AT TRANSFER BEAD.
4. "L" DIMENSION MUST BE MAINTAINED FOR LENGTH OF MIN. d AND d_1 CHORD.
5. SEALING SURFACE MUST BE SMOOTH AND FREE OF IRREGULARITIES THAT WOULD PREVENT A VACUUM SEAL BEING MADE, OR INTERFERE WITH ROTATION OF CLOSURE.
6. MAINTAIN "T" DIAMETER TO A DEPTH OF .530. FROM .530 TO .570 THE THREAD DIAMETER AT THE STOPS MUST BE MAINTAINED PER THE "T_1" DIAMETER AS SHOWN FOR PROPER CAP APPLICATION AND TO REDUCE CAP STRIPPING.
7. IF NO BEAD IS TO BE USED, THE THREAD STOPS AT THE FLAT MUST BE MAINTAINED AT THE SPECIFIED "T_1" DIAMETER AND THE .570 MINIMUM DEPTH.

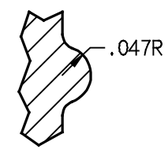

CUTTER PROFILE

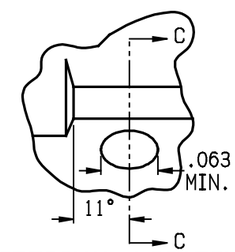

OPTIONAL LOCATING
DOT DETAIL
(SEE NOTE 2)

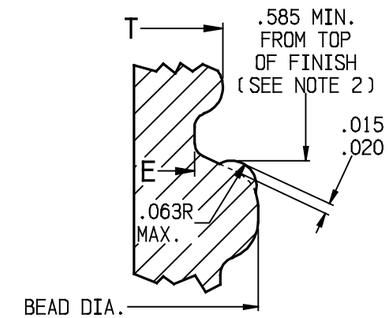

SECTION C-C

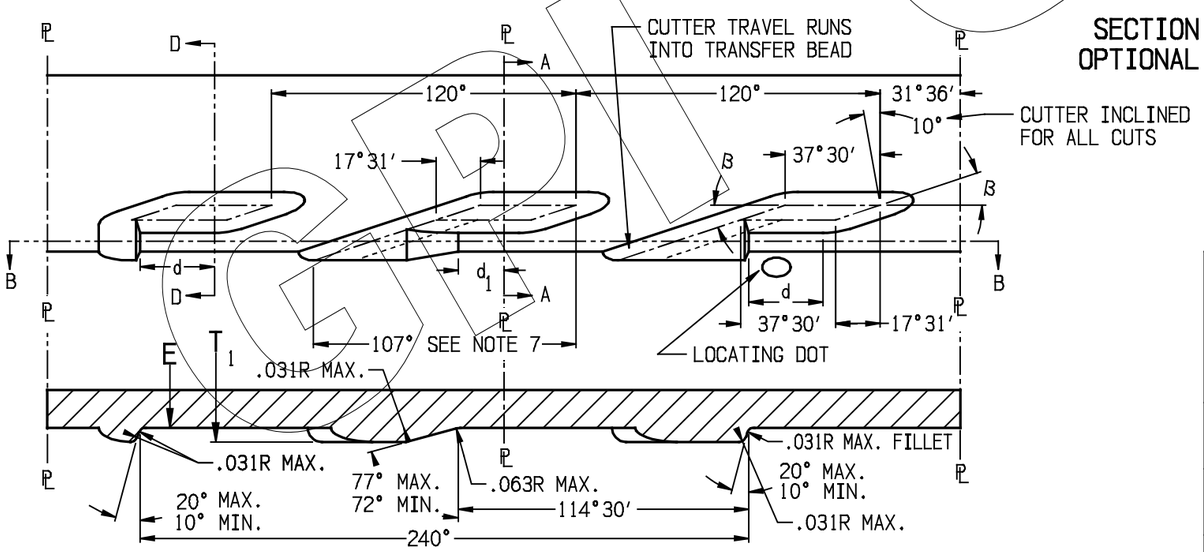

SECTION B-B

THIS OFFICIAL GLASS PACKAGING INSTITUTE PRINT CONSTITUTES ONE IN A SERIES OF VOLUNTARY STANDARDS INTENDED TO PROVIDE A BASIS FOR ACHIEVING COMPATIBILITY AND INTERCHANGEABILITY BETWEEN MANUFACTURERS AND USERS OF GLASS CONTAINERS AND CLOSURES THEREFOR. THE USER SHOULD BE AWARE THAT OTHER CONTAINER AND CLOSURE DESIGNS MAY DIFFER FROM THIS VOLUNTARY STANDARD, AND IT IS THE USER'S RESPONSIBILITY TO MAKE THE FINAL DETERMINATION AS TO DESIGN AND COMPATIBILITY. GPI ASSUMES NO RESPONSIBILITY FOR EITHER THE USE OF OR INTERPRETATION OF THE STANDARD, FOR IT BEING CURRENT, OR FOR THE DETERMINATION WHETHER ANY PARTICULAR MANUFACTURER'S PRODUCT CONFORMS TO THE STANDARD. THIS DRAWING CONTAINS INFORMATION TAKEN FROM ONE OR MORE PRINTS OF THE GLASS PACKAGING INSTITUTE (GPI). GPI OWNS ALL RIGHT, TITLE AND INTEREST IN THE COPYRIGHTS TO THIS DRAWING AND TO THESE PRINTS. GPI REQUIRES THAT YOU NOT REPRODUCE THIS DRAWING FOR OR DISTRIBUTE THIS DRAWING TO ANY THIRD PARTY WITHOUT GPI'S WRITTEN CONSENT. ANY INQUIRIES OR SUGGESTIONS CONCERNING THIS STANDARD CAN BE ADDRESSED TO: GLASS PACKAGING INSTITUTE, WASHINGTON D.C. AT WWW.GPI.ORG.
COPYRIGHT © GPI 1994,1999,2004

Edward A. Grant, CHAIRMAN	PRINTED AND DISTRIBUTED AS A VOLUNTARY STANDARD BY GLASS PACKAGING INSTITUTE, COMMITTEE ON DESIGN AND SPECIFICATIONS	APPROVED FOR PUBLICATION 6-16-04	SUPERSEDES DWG. NO. 20608
Karl Reisig, SECRETARY	GLASS FINISH NUMBER 2060	GPI DWG. NO. 2060-09	
TOP SEAL VACUUM LUG FINISH, DEEP, SIZES 27 THROUGH 38			